General Note: Lifts in excess of 70 short tons, verify any ballasting requirements.

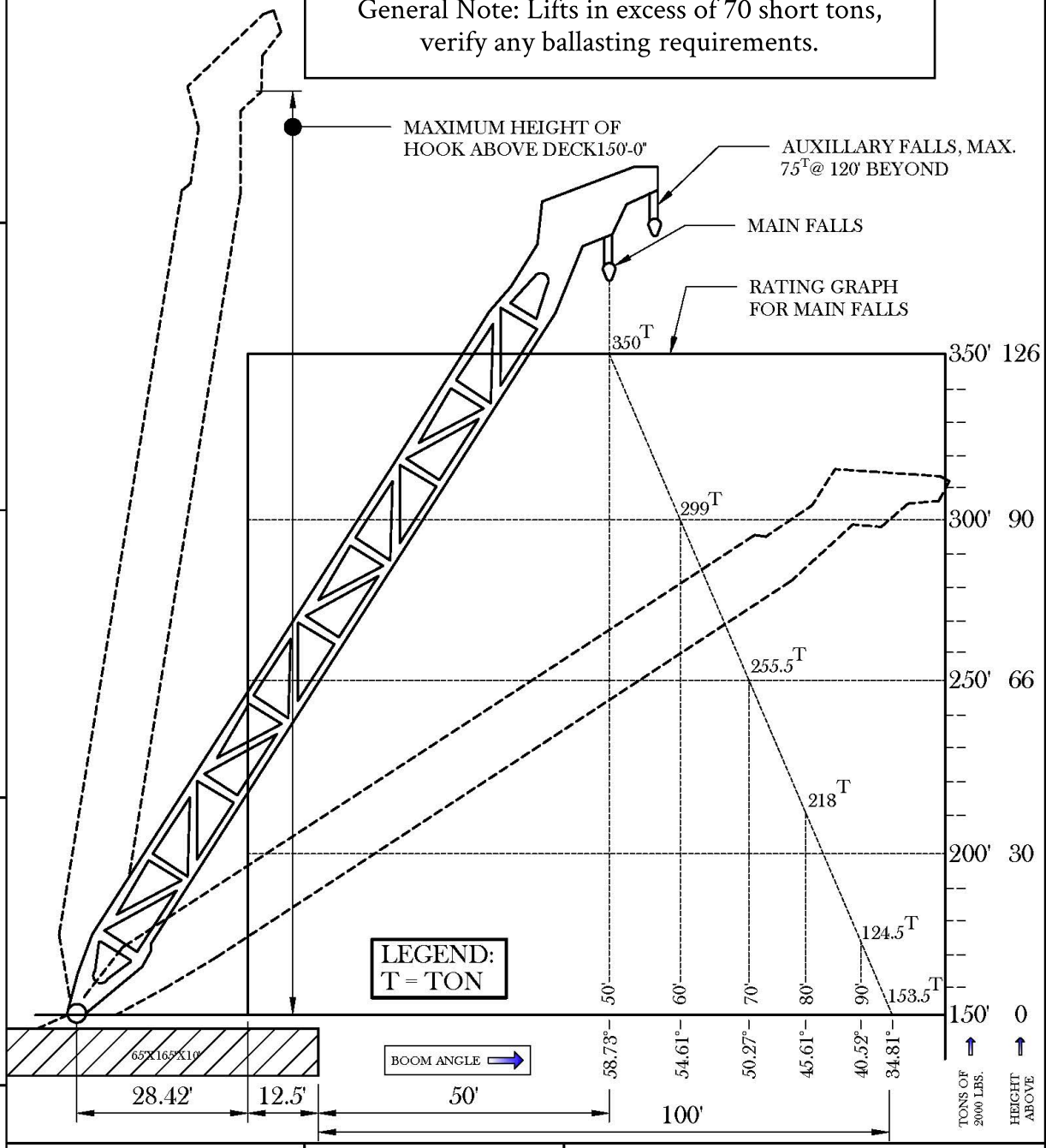

24 Hour Service — Serving Hampton Roads and Beyond

CROFTON Crane Rental & Rigging
A Division of Crofton Construction Services Inc.

12.5 Tons to 165 Ton Mobile Truck Cranes

16 Harper Ave - Portsmouth, Virginia 23707
Phone (757) 215-0256 Fax (757) 397-8721

Construction - Diving - Technical Services
16 Harper Avenue - Portsmouth, Virginia 23707
Tel (757) 397-1131 - Fax (757) 397-8693
www.croftondiving.com

CUSTOMER:

PROJECT TITLE:
RATING CHART - "SAMSON"

JOB NO: 16-0003	RATING CHART
CONTRACT NO: N/A	DWG SIZE:
DESIGNED BY:	SCALE: AS NOTED
DRAWN BY: T.M.HARRIS	REV: / DWG SIZE: A
REVIEW BY:	DATE: 05/22/16
APPROVED BY: SIGN & DATE:	SHEET: SK1